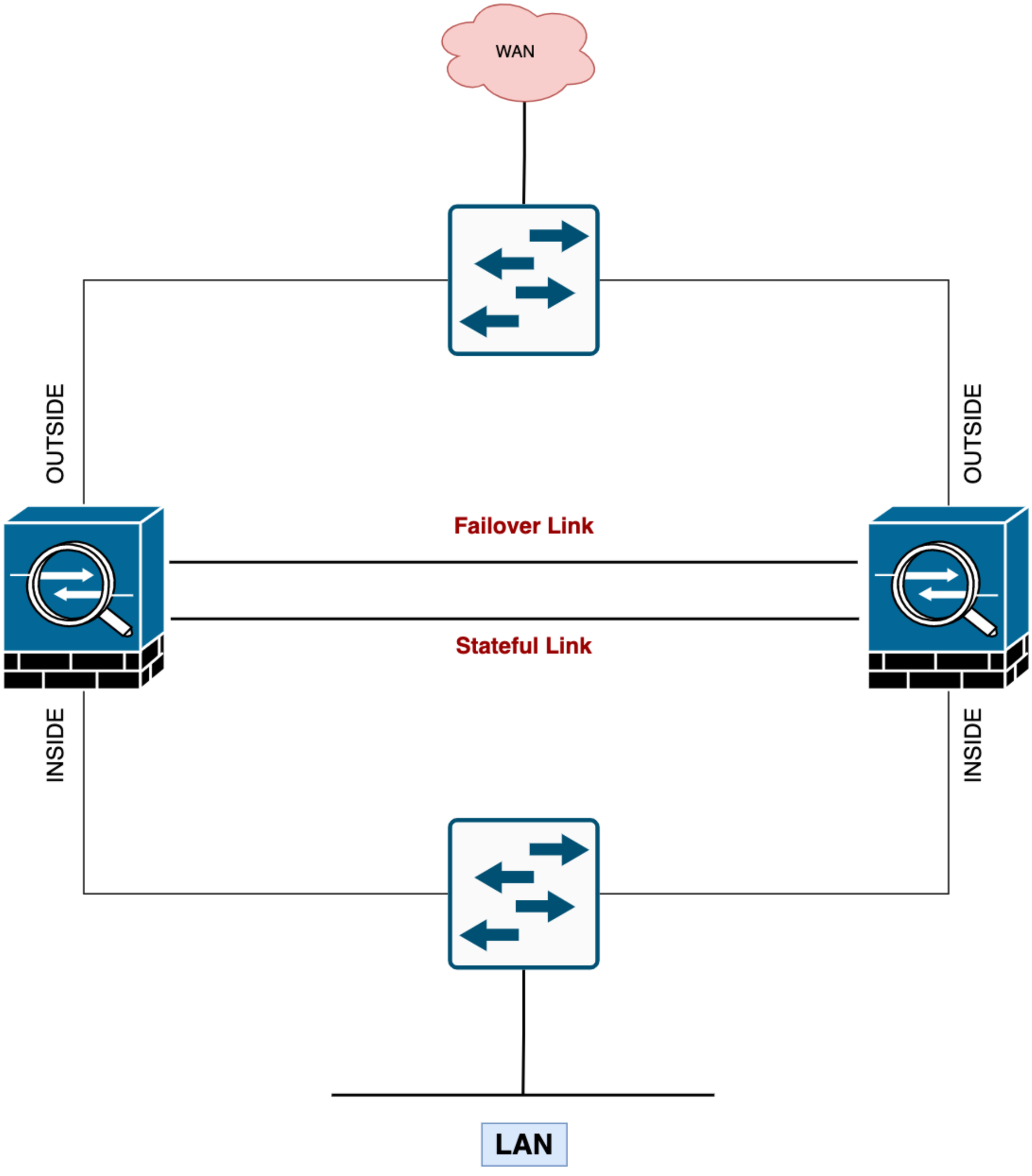
WAN
OUTSIDE
OUTSIDE
Failover Link
Stateful Link
INSIDE
INSIDE
LAN