Name _____

Date _____

Timeline Title:

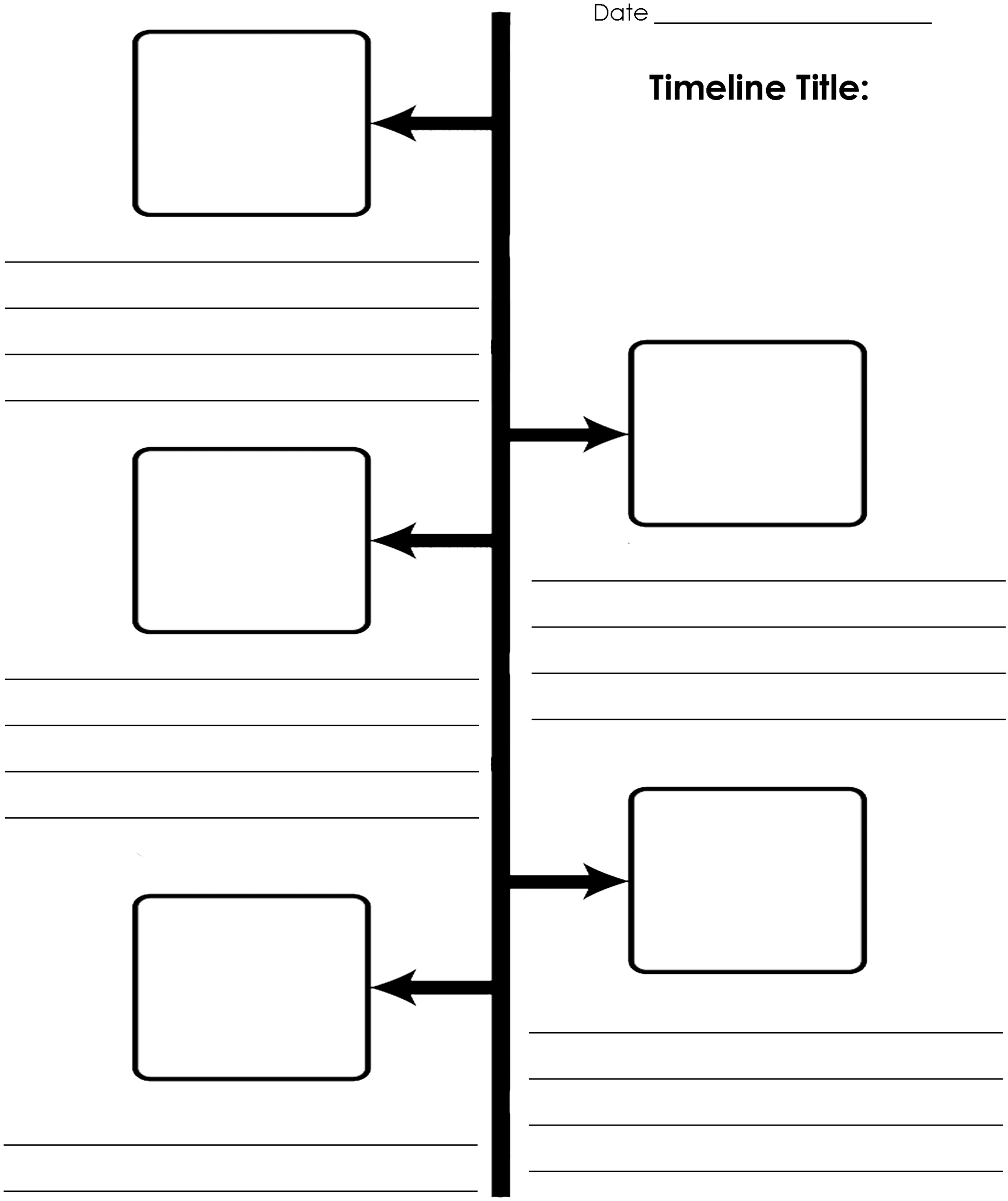

Squarehead TEACHERS