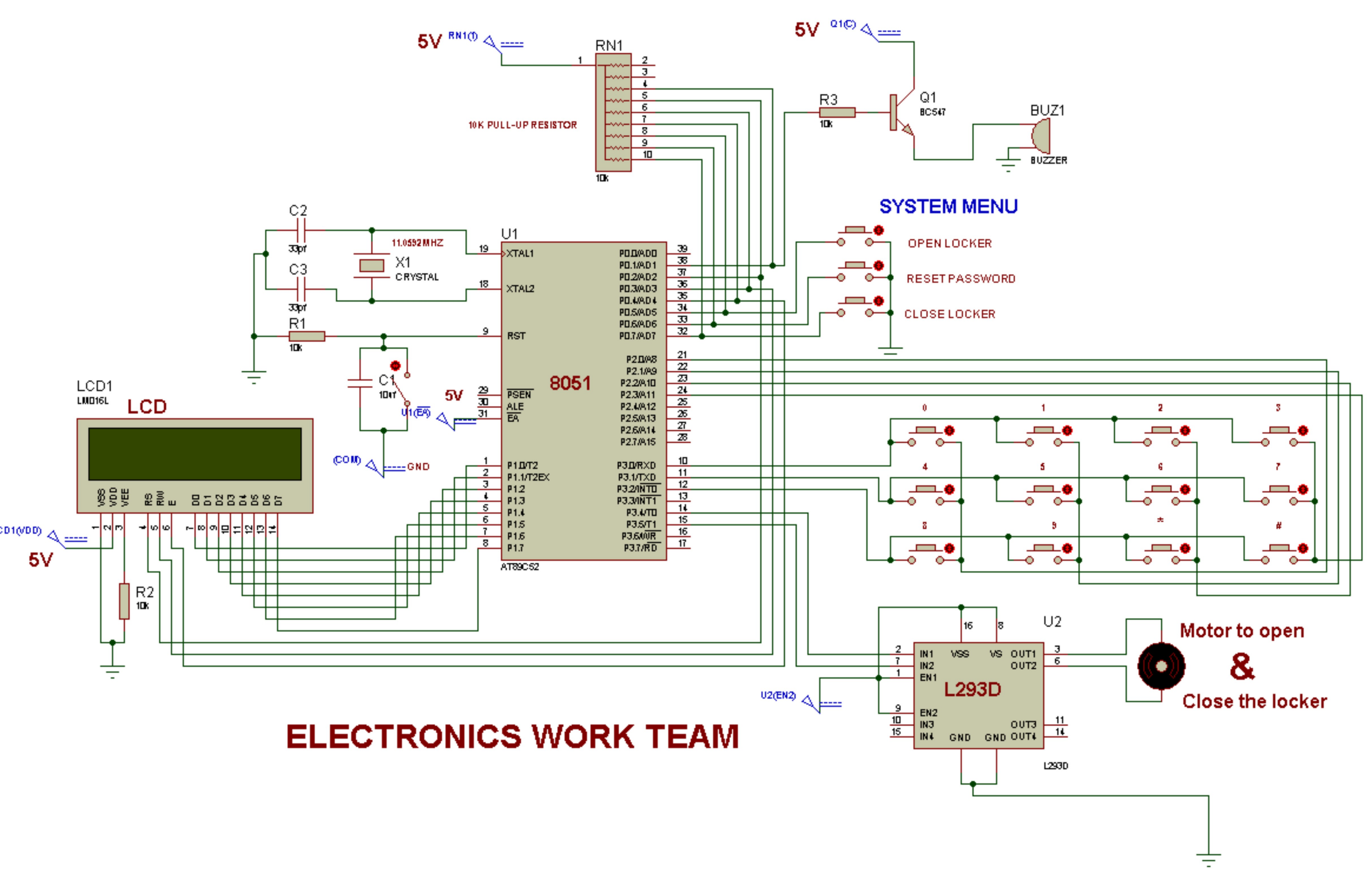
5V
RN1(1)
RN1
10K PULL-UP RESISTOR
10k
5V
Q1(C)
R3
10k
Q1
BC547
BUZ1
BUZZER
SYSTEM MENU
OPEN LOCKER
RESET PASSWORD
CLOSE LOCKER
C2
33pf
C3
33pf
11.0592MHZ
X1
CRYSTAL
R1
10k
U1
XTAL1
XTAL2
RST
PSEN
ALE
EA
8051
AT89C52
C1
10u1
5V
U1(EA)
(COM)
GND
LCD1
LM016L
LCD
VSS
VDD
VEE
RS
RW
E
D0
D1
D2
D3
D4
D5
D6
D7
CD1(VDD)
5V
R2
10k
U2
IN1
IN2
EN1
EN2
IN3
IN4
VSS
VS
OUT1
OUT2
OUT3
OUT4
GND
L293D
U2(EN2)
Motor to open
&
Close the locker
ELECTRONICS WORK TEAM